NAR Section 578

Volume 5 Issue 2

April, 2002

# WASHINGTON AEROSPACE

INSIDE THIS ISSUE:

*Kompetition Korner* 2

*Engine Building Clinic* 5

*Magazine Construction* 6

*The Aerotech Mustang – Double Indemnity* 8

*WAC March Meeting* 12

*Launch Schedule* 13

**Washington Aerospace Officers**

- President—Kent Newman
- Treasurer—Christopher Scott
- Secretary—Bill Clugston
- Ops Mgr—Andrew MacMillen

- **For Club Information:**
- Kent Newman - ohiochase @aol.com or 360 893-1148
- Christopher Scott—ChristopherJ@centurytel.net or 253 858-7256

## FROM THE PRESIDENT.....

By Kent Newman

Monroe Comes to an End

2002 is the tenth anniversary of the Monroe Spaceport. It is also the year that the Department of Corrections (DOC) set a new course for the use of the land around the Reformatory Honor Farm.

Shortly after a beautiful launch day at Monroe on the first Sunday in March, several members of the Monroe Operations Staff received an email from the DOC. The email announced that the land used by Puget Sound hobby rocket fliers these past ten years would no longer be available to them. The Department of Corrections intended to use the land to grow both harvestable vegetables and native plants, trees and grasses for commercial resale. The Honor Farm had been losing money for some time and had already ended its dairy farm operation in the fall of 2001. It was felt that this new use might help offset some of the costs of ownership to enable the DOC to hold on to the farm land and buildings.

It was apparent after several conversations with the DOC that there were no alternatives to the decision made by the DOC. The decision was effective immediately.

The Department of Corrections did relent, however, to allowing one last flying day at Monroe in April. Put it on your calendars; schedule it with your families; invite your friends. Come join everyone at Monroe Spaceport on Sunday, April 7th! Flight operations will commence at 10:00 a.m. and will end when activities cease or the waiver ends at 6:00 p.m. All Hobbies and Rocket Labs will be in attendance to meet your rocketry needs.

A great March launch day at Monroe

What Next?

The search for a new site is underway but the more people that become involved, the more likely success will come sooner rather than later. Look for a clear field that is ideally 5000' (one mile) square. If such a field is found and the landowner is receptive, Monroe staff can determine the viability of a waiver.

In the meantime, it seems appropriate to thank the Department of Corrections for their support these past ten years. Listed below is a list of names and addresses of those most responsible for allowing us to use the land. Please show your appreciation by writing these people and thanking them appropriately.

Larry Verlinda
Farm Manager
P.O. Box 519
Monroe, WA 98272

Pat Glebe
Superintendent
P.O. Box 777 Monroe, WA 98272

Aim skyward!!

# "Kompetition Korner"

*"As rocketeers looked for ways to improve and test their skills, contests have naturally sprung up."*

## 2002 Contest Schedule for the Northwest

By Jim Pommert

2001 will be remembered as a difficult year both for the United States as well as hobby rocketry. The national attacks as well as the Aerotech fire disrupted many lives and effected all rocketeers. It is also clear that we will recover from these difficulties. There are many bright spots to look back on as well. In the Northwest Rocketry scene we can see continued grow in nearly all aspects of the sport. There are now seven NAR sanctioned clubs in Washington State alone, certainly an all time high.

As rocketeers looked for ways to improve and test their skills, contests have naturally sprung up. Whether the contest is for maximum speed on the Nevada dry lakes or maximum duration in the fields of the Northwest, rocketeers have found that contest flying can inspire them to try something new or improve something old. The skills needed for building and flying more efficient models carry over into sport flying as well. Clubs throughout our area have found that contests add to the fun of their club launches.

This year at least three clubs are holding NAR sanctioned model rocket contests in the Northwest, OROC, WHIP, WAC and probably SEANAR. Other clubs like BMR are holding non-sanctioned contests. While most contests are NAR sanctioned they are also usually open to non-NAR members as well. The contest results for NAR members are tracked on a nationwide scoring system.

The following is a listing of the planned Northwest contest calendar for 2002. Keep in mind that weather, fire conditions, etc. may cause a change of plans.

Now lets look at the events for the recently completed March 3rd contest at Monroe. 1/2A-engine Parachute Duration is a competition open to single-stage rockets containing one or more parachutes for recovery purposes. The purpose of this event is to achieve the longest flight time. All parts of the rocket including the motor(s) must stay attached together for the entire flight and then be shown to the contest director for verification.

A-engine Streamer Duration is open to single-staged entries that contain a single streamer as the only recovery device. The purpose of this event is to achieve the longest flight time. A streamer is defined as a piece of cloth, plastic film, or paper whose shape is approximately rectangular. The streamer must have a length-to width ratio of five to one or greater and have a minimum of 100 sq. centimeters. The streamer and model must be connected by only a single line or cord, attached at the narrow end of the streamer. The cord may not be connected to either the streamer or the model at more than one point. The streamer may not be cut, slit, or otherwise altered in such a manner as to effect its nature as a simple connected plane. Joints in the streamer material must be assembled in such a manner as to keep the aerodynamic effects of the joint as small as possible. Such joints shall be parallel to the narrow axis of the streamer.

Sport Scale is open to any model rocket that closely resembles an existing or historical guided missile, rocket vehicle, or space vehicle. The purpose of this competition is to produce a flying replica of the real rocket vehicle that exhibits maximum craftsmanship, finish, and flight performance. Sport Scale differs from regular Scale in that dimensions of the model are not directly measured. The contestant must supply data that substantiate his/her model's adherence to scale in shape, color and paint pattern. Models are judged on Similarity of Outline, Finish, Color, Markings, Degree of Difficulty, Craftsmanship and Flight Characteristics.

E-engine Rocket Glider Duration is open to single-staged model rockets that return to the ground in stable, gliding flight in one unit supported by aerodynamic lifting surfaces which sustain it against gravity. Models

whose gliding surfaces are made of flexible materials (e.g. plastic film or cloth) are prohibited from this event. The purpose of this event is to achieve the longest flight duration time. The model must be shown to the contest director following flight for verification.

For full rules of these events please refer to the National Association of Rocketry Pink Book, the United States Model Rocket Sporting Code. The above descriptions of the events are abbreviated from the full rules used during the contest.

So, ready to try one of these events? One of the simplest is Streamer Duration. Results from around the country show that certain model features work best. First use a model that will go as high as possible. Minimum diameter and light weight are the keys here. Second, use a streamer that is near the minimum 5 to 1 length to width ratio. Finally, fold or pleated your streamer material to increase the whipping action of the streamer during decent. And, since we are flying at Monroe, paint that little rocker a nice bright color so you can find it again. Good luck and have fun improving your model rocketry skills.

# Northwest Competition Schedule

| Date | Location | Event Info |
|---|---|---|
| **April 20th & 21st** | **Sheridan, OR** | **OREO Section Contest**<br><br>B-engine Streamer Duration<br>A-engine Superroc<br>A-engine Boost Glider Duration |
| **May 5th** | **TBA** | **Washington Aerospace Open Contest**<br><br>B-engine Drag Race (<19 years)<br>F-engine Drag Race (>19years)<br>G-engine Streamer Duration<br>B-engine Boost Glider Duration<br>F-engine Helicopter Duration |
| **May 18th & 19th** | **Brothers, OR** | **OREO Regional Contest**<br><br>Open Drag Race<br>E-engine Eggloft Duration<br>Sport Scale<br>C-engine Boost Glider Duration<br>A-engine Rocket Glider Duration |

*"Sport Scale is open to any model rocket that closely resembles an existing or historical guided missile, rocket vehicle, or space vehicle."*

# Northwest Competition Schedule — Continued

| Date | Location | Event Info |
|---|---|---|
| **May 25th, 26th & 27th** | **Lowden, WA** | **WHIP Local Contest**<br><br>Predicted Duration Saturday only, open to any BSD kit<br><br>C-eng. Max Drag Race (<19 years) Sunday only<br><br>G-engine Drag Race (>19years) Sunday only, open to BSD Diablo kit Set Duration<br><br>Monday only, open to any BSD kit G-engine Eggloft Duration<br><br>All 3 days, open to BSD Sprints, 38 or 54 Special kits |
| **June 2nd** | **TBA** | **WA. Aerospace Open Contest**<br><br>Open Drag Race<br>A-engine Parachute Duration<br>C-engine Helicopter Duration<br>G-engine Dual Eggloft Duration |
| **June 15th & 16th** | **Brothers, OR** | **OREO Section Contest**<br><br>Open Drag Race<br>C-engine Eggloft Duration<br>C-engine Rocket Glider Duration |
| **July 7th** | **TBA** | **WA. Aerospace Open Contest**<br><br>B-engine Parachute Duration<br>B-engine Superroc Duration<br>C-engine Eggloft Duration<br>C-engine Rocket Glider Duration |

*"So, ready to try one of these events? One of the simplest is Streamer Duration."*

# Northwest Competition Schedule — Continued

| Date | Location | Event Info |
|---|---|---|
| **July 20th & 21st** | **Brothers, OR** | **OREO Regional Contest**<br><br>A-engine Parachute Duration<br>C-engine Eggloft Duration<br>A-engine Cluster Altitude<br>B-engine Boost Glider Duration<br>C-engine Rocket Glider Duration |
| **August 17TH & 18TH** | **TBA** | **WA. Aerospace Regional Contest**<br><br>C-engine Parachute Duration<br>E-engine Streamer Duration<br>F-engine Superroc Duration<br>C-engine Boost Glider Duration<br>A-engine Rocket Glider Duration |

# Washington Aerospace Engine Building Clinic

**WAC Engine Building Clinic**

By Bill Clugston

All Hobbies hosted Washington Aerospace's annual motor-building clinic on February 2nd in Puyallup, WA. For many fliers, the jump from single-use motors to re-usable motors is an intimidating step. The club's clinic provided the tips needed for fliers new to assembling reloadable motors. Sage advice was provided by Chris Scott and Bill Clugston.

Chris guided the clinic's attendees on building an engine from a pile of disassembled casing parts, rubber seals, and propellant slugs to a complete, ready to fly engine. Topics covered by Chris included proper seal lubrication, what lubricants to use, and what items in the AeroTech reloads that work well and what doesn't work. Bill helped guide some of the attendees who were actually assembling motors while following Chris' instruction. At least one clinic participant was planning on flying his newly built motor at Monroe the next day!

Other clinics planned for future meetings include electronics bay construction, electronics, recovery systems, and painting just to name a few topics.

# Setting Up Your Storage Magazine

*" Well, you've certified Level 2 and feel you need to obtain an LEUP (Low Explosives Users Permit) for the larger motors ."*

**Setting Up Your Storage Magazine**

by Andy Casillas

Well, you've certified Level 2 and feel you need to obtain an LEUP (Low Explosives Users Permit) for the larger motors and/or you are reading about the current regulatory environment and feel you need to get a LEUP just in case the enforcement requirements become interpreted along stricter guidelines. You have read the previous articles on Legal Storage (September and October 2001 newsletters) and have assembled the necessary forms to fill out and submit to the BATF (Bureau of Alcohol, Tobacco and Firearms) and the Washington State L&I (Labor and Industry).

Part of the materials you should have on hand are the two main reference publications, the ATF-Explosives Law and Regulations (also known as the "Orange Book") and, the Safety Standards for Possession & Handling of Explosives, Chapter 296-52 WAC (Washington State L&I "Red Book"). In reading these publications you will determine that a Type 4 magazine (low explosives) is required. You will also notice that this is an outdoor magazine and construction requirements are general in nature. As most people do not have the yard clearance distance for an outdoor magazine, I will focus on getting a variance approval for an indoor magazine, typically targeted for the garage. Based on this, a letter to the BATF requesting a variance to allow a Type 4 indoor magazine will be required. This procedure states you need a wavier to use the magazine, but you need a magazine to apply for the waiver. So, first you invest in a magazine and don't plan on using it until all of the approvals are obtained (figure 8-10 weeks).

**Magazine Construction**. A small to medium sized box will generally meet the rocket hobbyist's storage requirements. This box must be made of fabricated metal construction. A good lockable toolbox usually meets this requirement. You should budget around $100 dollars, with boxes available in a wide range of costs, depending on the size of your storage needs. Heavy-duty toolboxes are readily found at Home Depot, Sears or a construction supply store such as Coast Construction or Tacoma Screw. Try to get a toolbox with at least a 16 gauge metal construction, with the heavier/thicker metal, the better. Handgun storage cabinets also serve as an excellent magazine. These can be found at most gun shops and department stores such as Kmart and Wal-Mart.

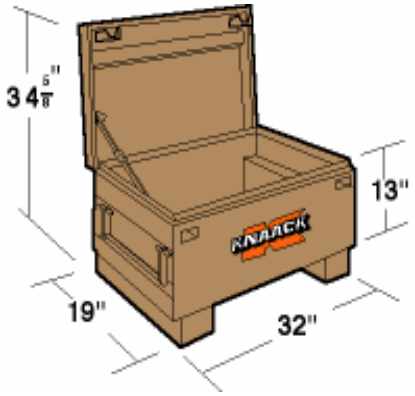


Example storage box (Knaack toolbox)

**Size.** One of the hardest things to determine is the size of magazine to purchase. I purchased a Knaack toolbox with a 2.3 cubic-foot capacity. I currently have stored four 54mm reloads, two 75mm reloads and one 98mm reload for a total of 9 lbs. of propellant. This fills approximately half of the magazine. Smaller motors (Easy Access) are stored in a separate magazine. If you plan to store more than this and/or include all of your motors in a magazine (as recommended by BATF) then I would recommend getting a magazine with at least two cubic feet of capacity. Larger motors tend to be bulkier and the total weight and number of motors that can be stored will depend on the size and quantity of motors. If your storage needs are geared toward the larger motors, you may wish to consider a larger magazine. In any case, consider that much of what is being stored will be liners and packaging inflating the storage space required for a given number of motors. The actual propellant weight (which can be obtained from the TMT, Tripoli Motor Testing)

# Setting Up Your Storage Magazine — Continued

is what the ATF and L&I will be watching, however.

**Hasps.** These should be part of the original manufactured box. The box may only have one hasp if the intended indoor storage room is lockable. Washington code WAC 296-52-453(5)(d) states "These (two lock) requirements do not apply to magazine doors that are adequately secured on the inside by means of a bolt, lock or bar that cannot be actuated from the outside."

**Locks.** Be sure your lock meets the 5-pin tumbler, 3/8" hardened shackle requirements. A common padlock (Masterlock No. 1 Padlock) is not heavy enough. A heavy-duty lock like the Masterlock No. 17 Padlock meets this requirement. These locks list for around $15.

**Liner.** Interior of the storage magazine must be non-sparking. A plywood or masonite liner will meet this requirement. Construction adhesive or screws can be used to secure the liner to the lid.

**Paint.** Indoor magazines need to be painted red and appropriately labeled. A light sanding of the exterior will help roughen up the surface for a good paint job. Two-inch high white lettering stating "LOW EXPLOSIVES" or "LOW EX" placed on the top of the magazine is usually sufficient labeling.

**Room /Signage.** If the enclosed storage area is attached to a residential dwelling, there must be at least a 1-hour rated firewall separating the two. This is readily accomplished with a by a two-by-four stud wall covered by drywall. A warning sign conspicuously placed in the area to warn any person approaching the magazine must be posted. The sign must be reflectorized finish, white background with 3" high red letters. As a minimum the sign should state "DANGER; EXPLOSIVES STORAGE AREA. DO NOT FIGHT EXPLOSIVE FIRES". Budget $100 for this sign. Exterior magazines require signage with more information than this.

**Storage.** Once you have the magazine installed, inspected by L&I and received your magazine license you still CANNOT store motors until you have your BATF indoor variance, even though you may already have your LEUP and L&I users permit. Your variance request should be part of your initial permit application. A list of BATF phone numbers and contact names should be kept to follow up if you have not received your variance approval within 8 – 10

Example storage box

weeks. The Washington state application does not give you a formal variance; once you get your magazine number you are good to go, pending only the BATF. A sample variance request letter is included at the end of this article to assist you. As each locality is slightly different, be sure to check with your local Fire Marshall to see if there are any additional requirements.

**Inventory.** Now that you have all of your permits and variances in hand, you may think the paperwork is done. Not a chance. A current inventory must be kept at all times and updated whenever there is a change. This means that after every use or purchase of a restricted access motor, the inventory must reflect this change. Washington State also requires a weekly inspection of your magazine along with documentation to confirm this. Be sure to keep purchase receipts of motors, vendor names and locations and vendor LEDP numbers (some agents request this so why take a chance?). Some ATF agents are also asking that the LEUP holder sign and date the inventory sheets once per month.

If you are handy with a spreadsheet, a form can be made up to automatically calculate and sum up your motor inventory weights. This will only require a few minutes a month to update. This spreadsheet can also be used to plan out your motor needs for the

*"One of the hardest things to determine is the size of magazine to purchase."*

## SETTING UP YOUR STORAGE MAGAZINE — CONTINUED

season. None of these requirements are difficult; it is just a matter of keeping the paperwork organized. If you get stuck on an issue there are plenty of us that have gone through the process and can answer most questions that arise.

Good luck!

*Sample LEUP Letter*

JOE ROCKETEER
123 Main St
Puyallup, WA 98374

Permit: 9-WA-053-34-3A-12345

(Current date)

Department of the Treasury
Bureau of Alcohol, Tobacco and Firearms
Federal Building Room 842
915 2nd Ave.
Seattle, WA 98174

Re: Request for variance, location of indoor Type 4 magazine in a residence

Gentleman:

This will serve as formal request for a variance to 27 CFR Part 55, Subpart K, §55.210(b)(1) and allow an indoor magazine to be located in a residence or dwelling. This request for variance would also apply to §55.219, Table of distances for storage of low explosives. There is precedence set in granting these variances.

The Type 4 magazine is a commercially fabricated metal tool box. The storage facility will be located in the outermost bay of a two car garage separated from the living space by a two-by-four stud wall covered by drywall (one hour fire rating). In addition to the storage facility lock there are locks on the vehicle entry door, and the interior man-door secure the garage. This proposal allows closer surveillance and greater managed security than a separate low explosive facility. The living space contains a security/fire monitoring system as well.

I am requesting a variance to construct an indoor structure facility for the sole purpose of storing hobby rocket propellant (ammonium perchlorate composite propellant) and related material to be used under the safety codes of the National Association of Rocketry (NAR) and the Tripoli Rocketry Association (TRA). The propellant is commercially manufactured ammonium perchlorate motors or propellant slugs in 62.5 gram amounts or greater. The propellant is considered a deflagrating rather than explosive material when ignited. The amount of the material to be stored in the facility will not exceed a quantity of 50 pounds. The only personnel with keys will be my wife and myself.

Please call me at 253-555-1234 if you have any questions.

Respectfully,

Joe Rocketeer

Attachments – L&I License

SITE PLOT MAP

# The Aerotech Mustang – Double Indemnity

**The Aerotech Mustang – Double Indemnity**

By Kent Newman

The Aerotech Mustang is one of the more popular mid-power rockets found at any launch and a write-up on its construction is not very unique. But, after admiring this rocket for a long time, I thought that I would build the kit and then put a bit of a twist on the project by up-scaling the Mustang to a 4" diameter. It would be a 200% upscale and fly on 38mm and 54mm motors!

The first part of the project will be the Aerotech kit with the write-up appearing in this issue. The second part of the project will be the up-scale version, which will be completed by mid-summer. Now, then, the kit!

**MUSTANG: ADVANCED MODEL ROCKET**

The Mustang is a 38" long rocket with a 1.9" diameter airframe. It is a very flexible rocket having been designed to fly on both 24mm and 29mm consumer use motors. As with many people that have flown high power rockets and decided to build a smaller mid-power kit, my initial thought was to build this to accommodate 29mm Aerotech reloadable motors. But, as my senses returned, it's really a silly thought! At roughly 11+ dry ounces, imagine where an H128 would send this rocket! And only once, at that! It would fly only to never be seen again!

The idea was discarded ☺

**Construction**

As with any kit, be sure to inventory all of the parts with the included parts list. Aerotech does an excellent job of providing both parts listings and detailed pictures to help the builder identify all kit components.

AT recommends building the kit with medium viscosity cyanoacrylate cement.

Now, I must admit that with the 3 or 4 other AT kits that I have built, I have always felt that epoxy was the only way to go.

It was sort of the usual "over-engineering approach" that most of us take in constructing projects in this hobby. This time, however, I decided to build it per directions; I' m using CA and CA only!

The order of construction is pretty standard except where there are assembly steps unique to Aerotech' s growing array of kits. One such step involves the "FIN-LOK" fin retaining rings. These front and rear retaining rings are aligned on the motor tube allowing the plastic fins to be snapped into place on the rings without being concerned about building a fin jig or developing some other means of providing for correct fin alignment. It' s a nice feature.

Another unique feature of the kit is the provision of molded plastic fins. Aerotech fins are a standard by which many model builders strive to build to. The compound angles of the fins are a big addition to the Mustang and look very cool!

The kit also uses an AT baffle system to cool the ejection gases before they reach the nylon parachute. This could present an option for many builders by considering the substitution of a Nomex chute protector and ¼" Kevlar or tubular nylon for a shock cord. I chose to stay with the stock baffle and the 1.8mm elastic shock cord which works just fine with this light kit.

The only construction step that I deviated from was the application of the rear centering ring. Not a major deviation by any means, the instructions called for gluing the rear centering ring before installing the motor tube assembly into the body tube. I chose to install and glue the motor tube assembly sans the rear centering ring. It is always easier for me to insert the motor tube assembly, check the alignment, and

*"I thought that I would build the kit and then put a bit of a twist on the project".*

# The Aerotech Mustang – Double Indemnity — Continued

*"Aerotech fins are a standard by which many model builders strive to build to. The compound angles of the fins are a big addition to the Mustang and look very cool!"*

apply any additional CA to the assembly without the rear centering ring installed. I simply put the ring on after I was satisfied that the MMT/FIN-LOK assembly was installed correctly.

**Finishing**

After all of the components are assembled, be sure to rough up the glassine surface of the body tube with 150 grit sandpaper before painting. It will greatly improve the adherence of paint.

I would also recommend using "Kilz" brand primer/filler. This is a very heavy solids primer that easily fills the shallow spiral rings of the paper body tube.

The plastic nosecone will also present some painting problems if it is not roughed up with sandpaper and washed thoroughly to remove any mold release. The Kilz primer will also help adherence and filling here.

Completed Aerotech Mustang

The instructions recommend applying a "medium gray" on the forward end of the rocket if one is planning on following the kit painting scheme. I suspect the intent is to match the gray color of the adhesive vinyl decals. If that is the case, let me suggest using a "light gray" on the upper surface of the rocket. In fact, I wound up using Krylon "Pewter" and the match turned out to be pretty accurate.

There are several paint masking steps required to support the kit paint design. The toughest one is the black tip on the nosecone. This requires attempting to stretch masking tape around an ogive nosecone while attempting to keep the line even and perpendicular to the airframe. Not an easy task! However, there is a little trick that helps a great deal. Use VCP software to create a transition template for the nosecone. VCP is a handy shareware program that can be found easily doing a google search or going to www.rocketryonline.com and searching through the vendors listing. The program is intuitively easy to use and will save a great deal of time while helping the builder complete the job in accurate fashion.

After applying the final paint coat, let the paint cure for at least three days. Take some 600 or 1000 grit wet or dry sandpaper and lightly wet sand the painted rocket to knock off any dust particles, paint ridges or stray fuzzies. Dry the rocket and apply a clear acrylic gloss to the rocket (be sure to use a gloss of the same brand as the paint to ensure compatibility). The gloss will result in a very attractive finish and with the sanding will eliminate the paint ridges that occur from applying different colors of paint.

Now, there is a point of debate regarding the application of the self-adhesive decals. The builder can either put the decals on before spraying with a gloss finish coat or the builder can put the decals on after the gloss coat has been applied. With the clearcoat applied after the decals, the pro is that the finished product is more complete with minimal edges of the decals being evident. The con is that if the rocket suf-

# The Aerotech Mustang – Double Indemnity — Continued

fers any damage over its life (as it unlikely will), removing those decals will be next to impossible without a major disruption of the entire painted surface. Trying to lift a decal edge, even using a heat gun, will be very difficult. Use your own judgment on this one. Unless the project is truly intended to be a display piece, I typically put the decals on top of the gloss coat.

If you intend to upscale this model as I intend to, it should be mentioned that this is the time to plan how the decal markings will be up-scaled. There are several ways to do this:

- Measure the decals with the intent to paint them on the up-scaled version of the project.
- Measure the decals with the intent to cut up-scaled adhesive-backed materials in the shape of the original decals.
- With AT' s permission, have a sign and graphics company replicate the decals in a larger version for your project.

**The Finale**

Once done, the rocket is ready to go!

The first flight was on a 24mm F24 White Lightning sending the rocket up to about 1200 feet, according to Aerotech' s motor guide. The flight was straight and true and the delay was right on the money with the parachute deploying at apogee. Unlike some of the other AT kits, the Mustang parachute is sized just about right for this rocket.

The second flight was on a 29mm F40 (my son' s choice). And, frankly, I' m really glad I did not build the rocket to accept 29mm reloadables. The F40 took the rocket over 2000' and the little Mustang is tough to follow in anything other than a clear blue sky. The boost and coast were superb, however, and the recovery was perfect save for the protracted walk required to retrieve the rocket. All in all, a great sport rocket to add to one' s collection!

*"Frankly, I' m really glad I did not build the rocket to accept 29mm reloadables. The F40 took the rocket over 2000' and the little Mustang is tough to follow in anything other than a clear blue sky. !"*

# March Washington Aerospace Meeting

**WAC March Meeting**

By Bill Clugston

The WAC March 2nd meeting quickly opened with its first topic, Experimental Rocketry, presented by Greg Deputy. Greg stressed one point often and early in the talk -- safety. When you're building your own motors you are dealing with potentially flammable and explosive chemicals. Read and understand what you're dealing with before you start mixing chemicals! Secondly, get legal! Get your permits from the federal, state, and local governments before building motors. Thirdly, try to attend a class. There are classes on both the east and west coasts and at least one in the mid-west. There are also at least two or three good books on motor-building. Terry McCreary's, "Experimental Composite Propellant", is a good place to start.

Greg explained that many builders start with Potassium Nitrate and sugar motors and then move on to the Ammonium Perchlorate (AP) mixes from there. The sugar-based motors are well documented on the Internet and in books, but do lack the ability to scale into larger motors. For getting into AP motors, Greg emphasized the need for good tools, such as, an industrial grade KitchenAid mixer. Also you'll need cas-

ings and liners for your motors. These can be bought online at www.rocketmotorparts.com or better yet become good friends with a machine shop! Figure on shelling out something in the neighborhood of $600 to $800 to get started in motor building.

Kent Newman also contributed to the EX discussion by showing his "N/O" engine casing. It will definitely be an interesting Black Rock this year! The talk was wrapped up with a video program showing several static engine tests using various propellants. Greg definitely has an interesting way of entertaining his neighbors!

The club discussion went on to old business topics. The only old business topic concerned club outreach. WAC has been informed of a central contact person for school science activities in Pierce county. Kent asked if anyone had any objections on the club using the school contact and there were no objections. New business centered around improvements at Offut field. It was suggested that the club contact Dave Davis at the Boeing Model Rocket Club to see if they would be interested in sharing the improvement effort at Offutt. The suggestion was met with a positive response from club members. Andrew MacMillen agreed to spearhead the Offut field improvement efforts.

After the club business was completed Kent led a discussion concerning rocketry electronics. Kent displayed an assortment of old and new altimeters, staging timers, and payload bays. Other club members chimed in with their experiences with different manufacturers and their electronics. The electronics discussion continued until about 9:30 with members finally leaving to ready their rockets for a great day of flying at Monroe!.

| Month | Meeting Topic | Presenter |
|---|---|---|
| May | Igniters | Kent Newman |
| | Youth Rocketry Building | |
| | June NAR Contest Review | Jim Pommert |
| June | Level 2 Rocket Building | Chuck Layton |
| | Recovery Systems | Kent Newman |
| July | Two-Stage HPR Rockets | Kent Newman |
| | Youth Rocket Building | |
| | August NAR Contest Review | Jim Pommert |
| August | Painting | Mike Watkins |
| September | Level 3 Rocket Building | Kimberly Harms |

# Club Meetings

**7:00 p.m. Saturday night**
**Where: Peace Lutheran Church**
**214 East Pioneer**

Club Meetings

The first Saturday of every month!

Where: Peace Lutheran Church
214 East Pioneer
Puyallup, WA 98372

Time: 7:00 p.m.

We're on the Web!
www.hawkfeather.com/wa-aero/

**NAR Section 578 Super Discounts**

**All club members get the following discounts at the All Hobbies store**

**20%**
**Special Discount on single item purchases of over $300 (except as noted).**

**10%**
**On rocket kits**
**Aerotech, Custom, Estes, Loc, PML, Quest, and the Launch Pad**

**10%**
**Parachutes**
**Loc, PML, Topflight**

**5%**
**Aerotech & Dr. Rocket Motor (red cases) hardware & parts**

**No Discount**
**All Red Sticker Items**

**ALL HOBBIES STORE**
**1430 E. Main**
**Puyallup, WA 98372**
**253-841-0089**

**http://allhobbies.net/**

# Regional Launch Schedule

Notes:

1) BEMRC launches (Boeing) are model rockets only. "C" impulse maximum.
2) "EX" motors are not allowed at certified motor launches; and certified motors are not allowed at "EX" launches except when flown with an "EX" motor.

| | |
|---|---|
| April 20th-21st (Sat-Sun) | Sheridan, OR (OREO) |
| April 27th-28th (Sat-Sun) | Touchet, WA (WHiP) |
| May 4th (Sat) | Puyallup, WA **(WA Aerospace Meeting)** |
| May 4th-5th (Sat-Sun) | Swan Falls, ID Tripoli Idaho—SPUDROC 7 |
| May 11th (Sat) | Kent, WA (BEMRC) |
| May 11th (Sat) | Dayton, WA (BMR) |
| May 18th (Sun) | Spokane, WA (SPARC) |
| May 18th –19th (Sat-Sun) | Brothers, OR (OREO) |
| May 25th-27th (Sat-Mon) | Touchet, WA (WHiP) |
| June 1st (Sat) | Puyallup, WA **(WA Aerospace Meeting)** |
| June 7th-9th (Fri-Mon) | Dayton WA (BMR) |
| June 8th (Sat) | Kent, WA (BEMRC) |
| June 8th (Sat) | Spokane, WA (SPARC) |
| June 15th-16th (Sat-Sun) | Brothers, OR (OREO) |
| June 22nd-23rd (Sat-Sun) | Touchet, WA (WHiP) |
| July 6th (Sat) | Puyallup, WA **(WA Aerospace Meeting)** |
| July 11th-16th (Thurs - Tues) | Amarillo, TX (LDRS XI) |
| July 13th (Sat) | Dayton, WA (BMR) |
| July 14th (Sun) | Spokane, WA (SPARC) |
| July 20th-21st (Sat-Sun) | Brothers, OR (OREO) |
| July 27th-28th (Sat-Sun) | Lowden, WA (WHiP) |
| August 2nd-4th (Fri-Sun) | Black Rock, NV (AeroPac) |
| August 10th (Sat) | Dayton, WA (BMR) |
| August 16th-18th (Fri-Sun) | Bonneville Salt Flats, UT (UROC) |
| August 24th-25th (Sat-Sun) | Lowden, WA (WHiP & SPARC) |
| Sept 14th-15th (Sat-Sun) | Lowden, WA (WHiP) |
| Sept 21st (Sat) | Dayton, WA (BMR) |
| Sept 27th-29th (Fri-Sat) | Black Rock, Nevada (AeroPac) |

Launch Contacts:

| | | |
|---|---|---|
| Washington Aerospace (WA) | Kent Newman | 360-893-1148 |
| Tripoli Puget Sound (TRAPS) | Christopher Scott | 253-858-7256 |
| Wahington High Power (WHiP) | Scott Binder | 509-525-4461 |
| Blue Mountain Rocketeers (BMR) | Tim Quigg | 509-382-4176 |
| Boeing Emp Model Rocket Club (BEMRC) | Bruce Johnson | 425-742-2252 |
| Seattle NAR (SEANAR) | Don Qualls | 206-784-1667 |
| Spokane Area Rocket Club (SPARC) | Bret Conant | 509-299-7122 |
| Oregon Rocketry Enthusiast's Org (OREO) | John Lyngdal | 503-649-7371 |
| Tripoli – Oregon | Gary Fillible | 503-843-3137 |
| Tripoli – Portland | Dennis Winningstad | 503-297-3685 |